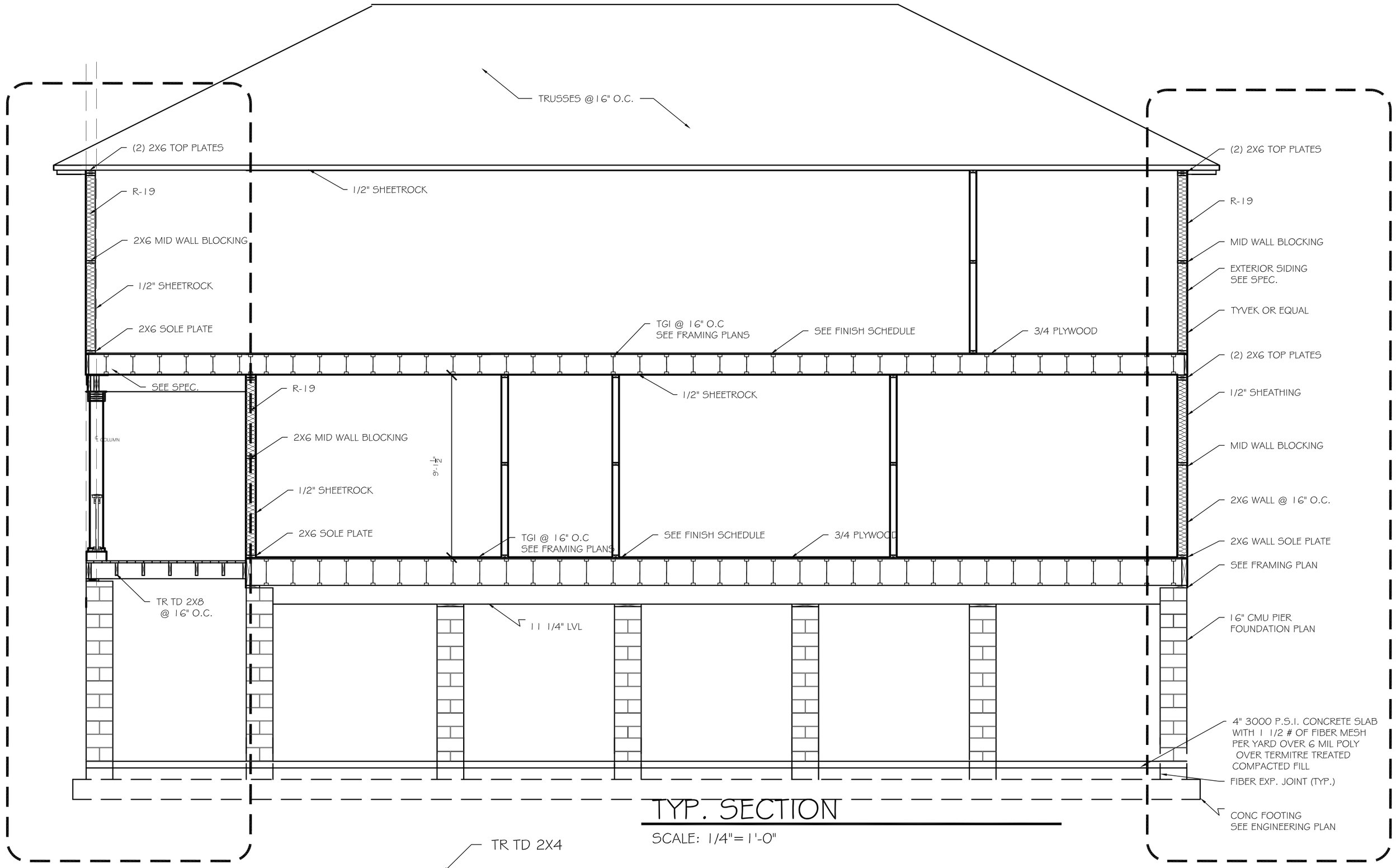

TYP. SECTION

SCALE: 1/4"= 1'-0"

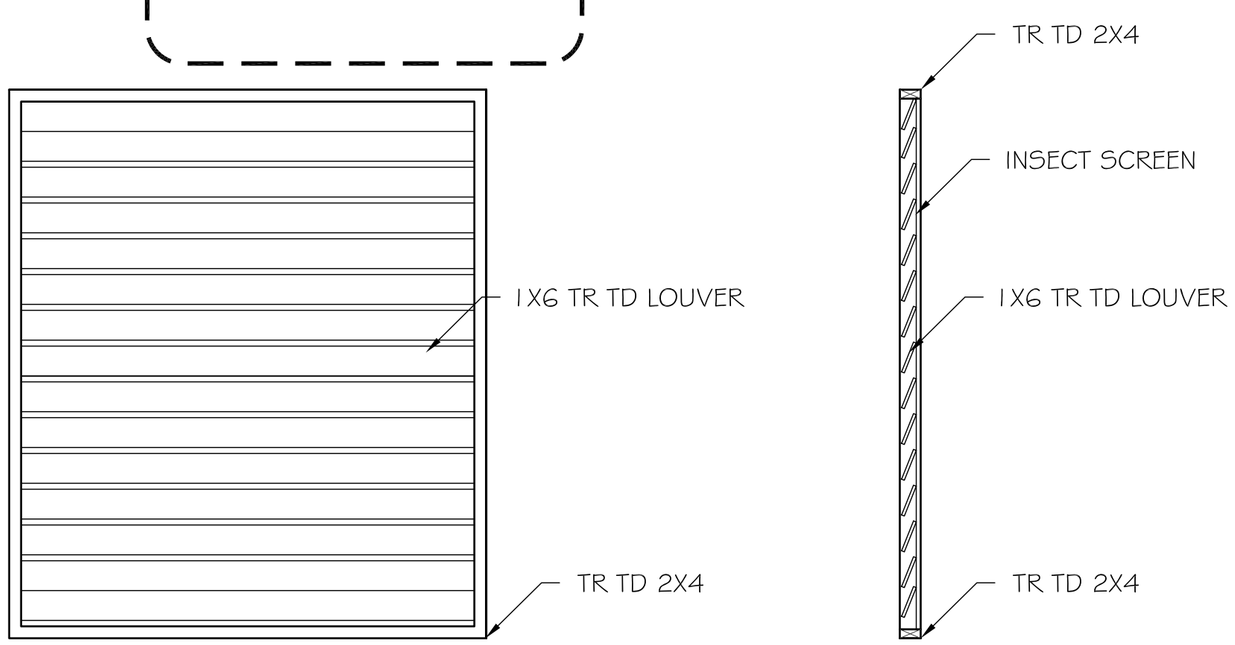

VENT DETAILS

SCALE: 1/2"= 1'-0"

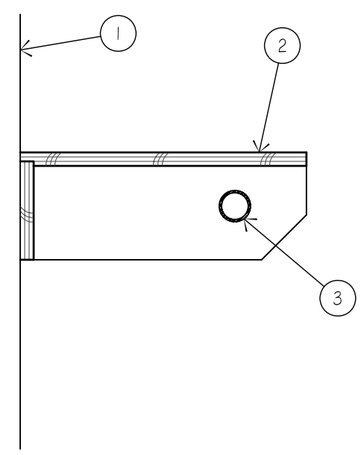

1. LINE OF WALL.
2. 3/4" BIRCH VENEER PLYWOOD HAT SHELF.
3. CHROME HANGER ROD.

ROD AND SHELF

N.T.S.

ALL DESIGNS, DRAWINGS SHOWN ON THIS SHEET ARE PROPERTY OF COASTAL HOME DESIGNS LLC. ANY UNAUTHORIZED REPRODUCTION IS SUBJECT TO LEGAL PROSECUTION. POSSESSION IN ANY FORM CONSTITUTES ACCEPTANCE OF THESE CONDITIONS.

COASTAL HOME DESIGNS LLC.
148 COUNTRY CLUB BLVD.
ST. GEORGE, SC 29477
1 866 399 HOME
PLANS@COASTALHOMEDESIGNS.COM

ALL DESIGNS, DRAWINGS SHOWN ON THIS SHEET ARE PROPERTY OF COASTAL HOME DESIGNS LLC.. ANY UNAUTHORIZED REPRODUCTION IS SUBJECT TO LEGAL PROSECUTION. POSSESSION IN ANY FORM CONSTITUTES ACCEPTANCE OF THESE CONDITIONS.

REVISIONS	
DRAWN BY:	CRK
CHECKED BY:	CRK
DATE:	3.05.02
SCALE:	
JOB NO.:	C 150

A-9